Power Quality Solutions

PQvar Series Static Var Generator (SVG)

Series/Type:	**PQSF8300V315 / 3P4W Floor-mounted**
Ordering code:	**B44066F8300V315**
Date:	August 2018
Version:	1

© EPCOS AG 2018. Reproduction, publication and dissemination of this publication, enclosures hereto and the information contained therein without EPCOS' prior express consent is prohibited.

EPCOS AG is a TDK Group Company.

Characteristics

- Static Var Generator (SVG) PQvar Series utilizes three level inverter topology to provide real time response to reactive power requirements and load balancing. It monitors the current continuously and compensates the reactive part of the measured current.
- 300 kvar 3P4W (3-phase/4-wire) device for phase current and neutral wire correction.

Features

- User-friendly menu operation via TFT color touch screen
- Reactive power compensation cos φ ≥ 0.99
- Ultra-fast reactive power compensation
- Load balancing between phases and neutral wire
- Power factor correction fully inductive and capacitive current compensation from 0 … 100%
- High performance and reliability
- Simple installation & commissioning

Typical applications

- Industries having variable frequency drives, inverters UPS, furnaces such as paper, steel rolling mills, textile, garment, software parks, automotive, battery manufacturing, continuous process plants, pharmaceutical industries, etc.
- Green power generation (e.g. photovoltaics and wind turbines)
- Data centres, hotels, hospitals, shopping malls and office buildings
- Sensitive equipment manufacturing (e.g. silicon wafer production, semiconductor production)
- Industrial production machines
- Electrical welding systems
- Plastic industry machinery (extruders, injection moulders)

Safety features

- Overload protection
- Internal short-circuit protection
- Overheating protection
- Overvoltage and undervoltage protection
- Inverter bridge protection
- Resonance protection
- Fan fault alarm

Technical data and specifications SVG system

Type	PQSF8300V315
Ordering code	B44066F8300V315 (floor-mounted)
System input / number of phases	3-phase/4-wire
Compensation capacity	300 kvar (3x100Kvar module)
Frequency	45 … 62 Hz
Input voltage (min. / max.)	400V(-40% … +20%)
Inverter technology	12 IGBT three-level topology
Steady state response time	< 5 ms (steady state response time to full steady state compensation)
Power factor correction	Fully inductive and capacitive current compensation from 0 … 100%
Weight of a single unit	Approx. 404 kg
Dimensions of a single unit	Approx. 600x1000x2200 mm (w x d x h)
Current transformer	3 CTs are needed. Source or load-side selectable, primary current range 150 A … 10000 A, secondary current 5 A (see details of choosing the right CT in the manual) External current transformers are mandatory needed, but not included in the SVG delivery.
Efficiency	> 97%
Cabinet mounting	Rack
Cooling	Smart air cooling 1030L/sec
Communication ports	RS485, CAN, and network port
Communication protocols	Modbus and PMBus
Operating temperature	-10 … +40 °C
Protection class	IP20 according to IEC 529 (other IP classes are customizable)
Panel color	RAL7035 light grey

Technical data and specifications SVG system (cont.)

Humidity	5 … 95%, non-condensing
Self-protection	Yes
Overheating protection	Yes
Overvoltage and undervoltage protection	Yes
Typical noise level	< 65 dB (depending on model and load conditions)
Altitude	1% up 1500 m. Between 1500 m to 4000 m, according to GB/T3859.2, the power decreases by 1% for every additional 100 m.
General safety requirements for SVG use and operation area	EN 50178:1997/IEC 50178:1997
SVG EMC requirements	EN 61000_6_2(2005)/EN55011,GROUP1,CLASS A IEC 61000_6_2(1999)/CISPR11,GROUP1,CLASS A
SVG performance requirements	EN 50091-3/IEC 62040-3/AS 62040-3(VFI SS 111)

Display of ordering codes for EPCOS products

The ordering code for one and the same EPCOS product can be represented differently in data sheets, data books, other publications, on the EPCOS website, or in order-related documents such as shipping notes, order confirmations and product labels. **The varying representations of the ordering codes are due to different processes employed and do not affect the specifications of the respective products**. Detailed information can be found on the Internet under www.epcos.com/orderingcodes

Dimensional drawing

100 kvar module

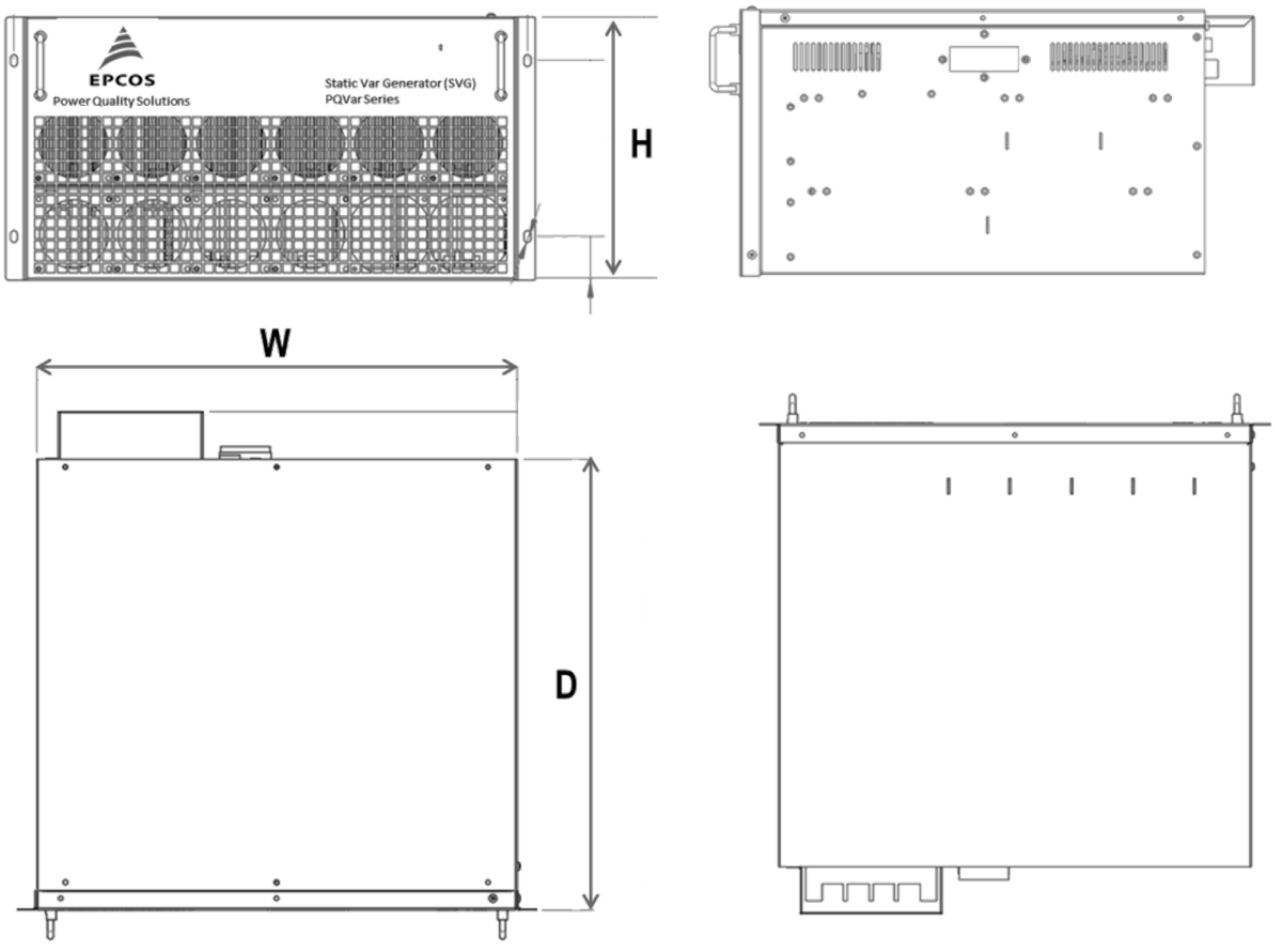

Model	W (Width) mm	D (Depth) mm	H (High) mm
100 kvar Module	500	520	269

AC mains connection

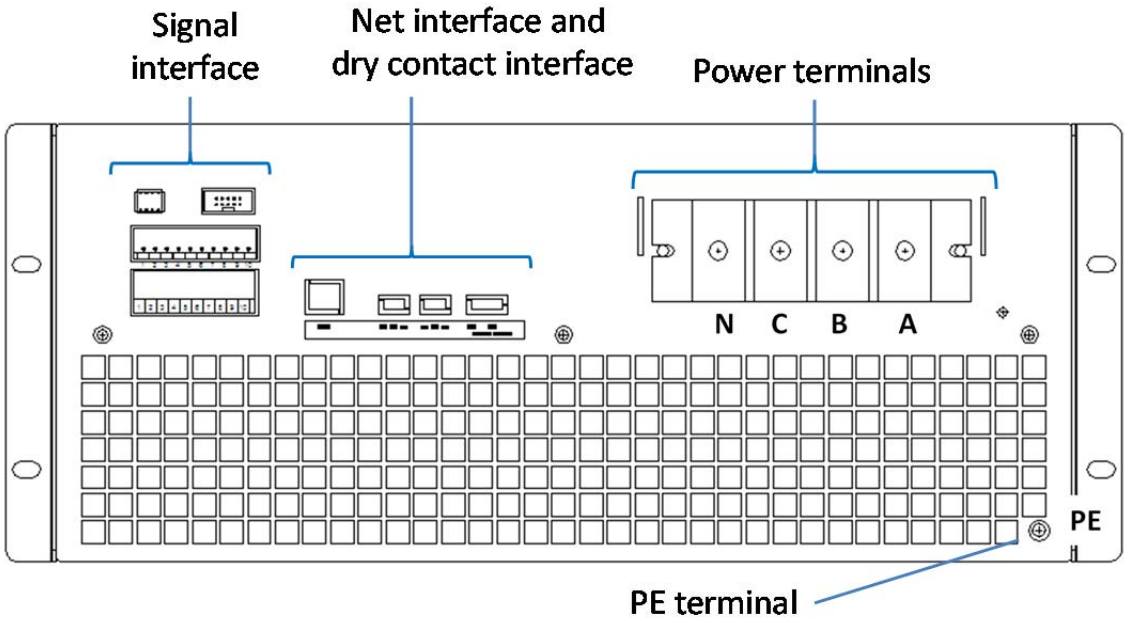

Wiring terminal

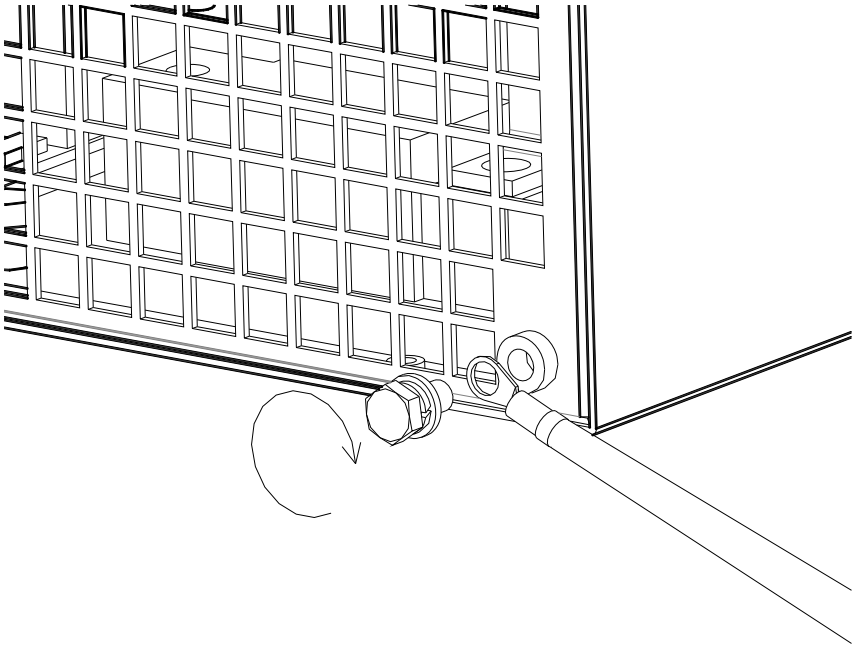

Installation of ground wire

Cabinet dimensional drawings

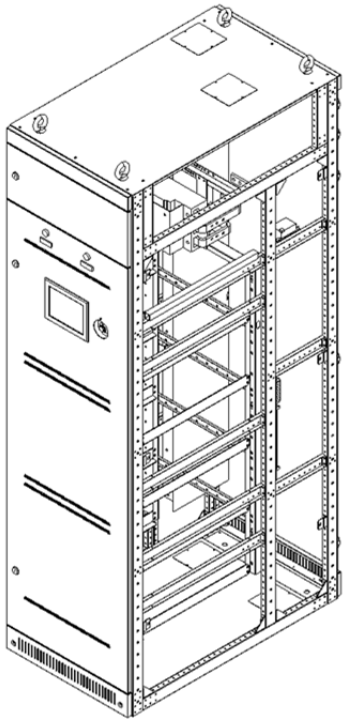

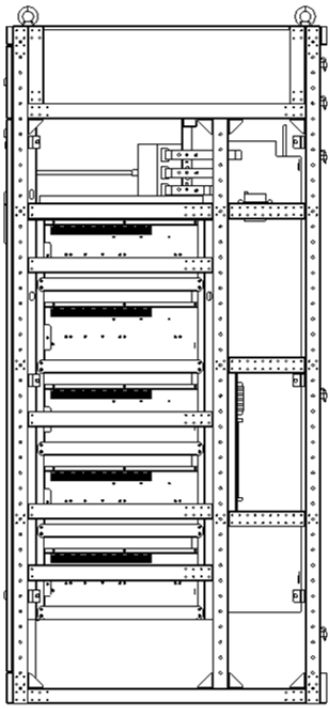

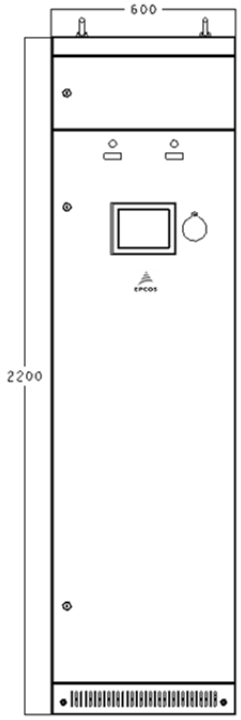

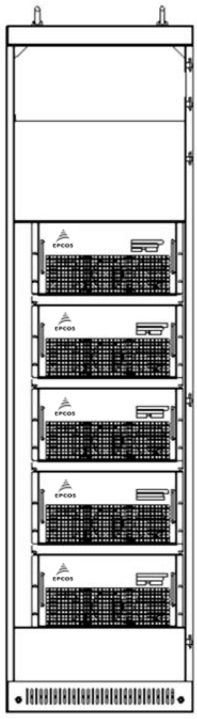

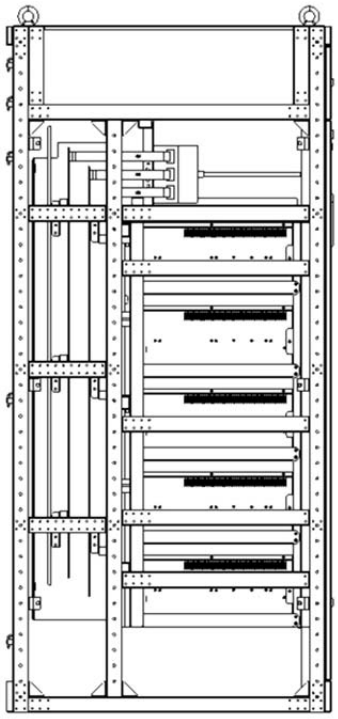

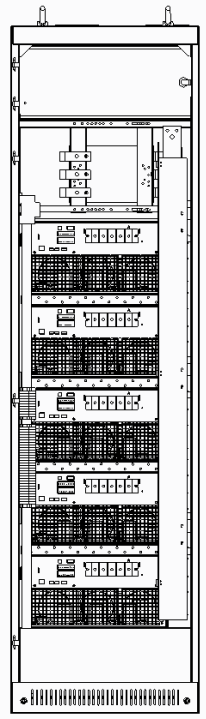

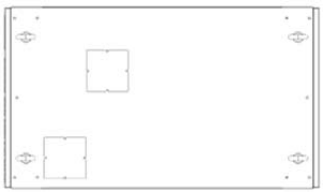

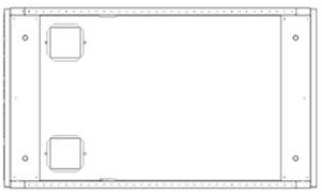

Connection Diagram

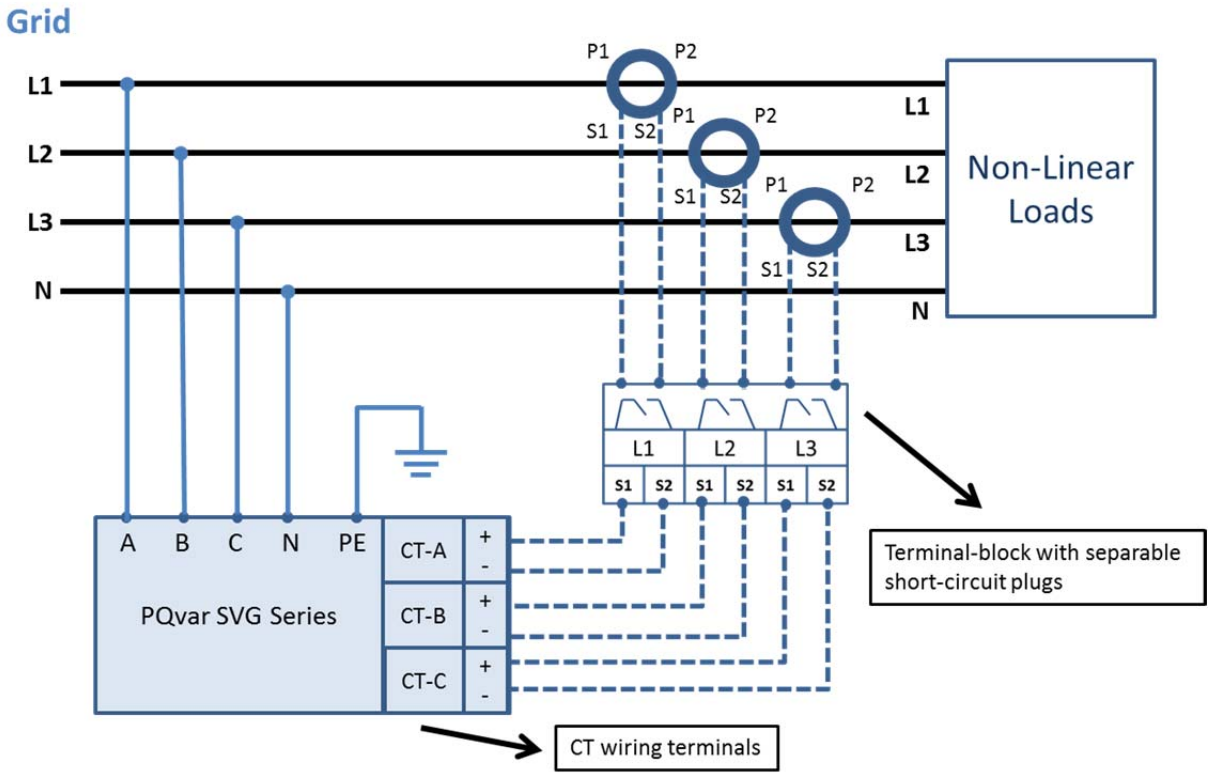

Principle of CT connection

Note: Current transformers are not included in the delivery and must be purchased separately.

Please also carefully read the cautions, notes and warnings in the SVG PQVar operating and installation instructions manual!

Important notes

The following applies to all products named in this publication:

1. Some parts of this publication contain **statements about the suitability of our products for certain areas of application**. These statements are based on our knowledge of typical requirements that are often placed on our products in the areas of application concerned. We nevertheless expressly point out **that such statements cannot be regarded as binding statements about the suitability of our products for a particular customer application.** As a rule, EPCOS is either unfamiliar with individual customer applications or less familiar with them than the customers themselves. For these reasons, it is always ultimately incumbent on the customer to check and decide whether an EPCOS product with the properties described in the product specification is suitable for use in a particular customer application.
2. We also point out that **in individual cases, a malfunction of electronic components or failure before the end of their usual service life cannot be completely ruled out in the current state of the art, even if they are operated as specified.** In customer applications requiring a very high level of operational safety and especially in customer applications in which the malfunction or failure of an electronic component could endanger human life or health (e.g. in accident prevention or life-saving systems), it must therefore be ensured by means of suitable design of the customer application or other action taken by the customer (e.g. installation of protective circuitry or redundancy) that no injury or damage is sustained by third parties in the event of malfunction or failure of an electronic component.
3. **The warnings, cautions and product-specific notes must be observed.**
4. In order to satisfy certain technical requirements, **some of the products described in this publication may contain substances subject to restrictions in certain jurisdictions (e.g. because they are classed as hazardous)**. Useful information on this will be found in our Material Data Sheets on the Internet (www.epcos.com/material). Should you have any more detailed questions, please contact our sales offices.
5. We constantly strive to improve our products. Consequently, **the products described in this publication may change from time to time**. The same is true of the corresponding product specifications. Please check therefore to what extent product descriptions and specifications contained in this publication are still applicable before or when you place an order. We also **reserve the right to discontinue production and delivery of products**. Consequently, we cannot guarantee that all products named in this publication will always be available. The aforementioned does not apply in the case of individual agreements deviating from the foregoing for customer-specific products.
6. Unless otherwise agreed in individual contracts, **all orders are subject to the current version of the "General Terms of Delivery for Products and Services in the Electrical Industry" published by the German Electrical and Electronics Industry Association (ZVEI)**.
7. **Our manufacturing sites serving the automotive business apply the IATF 16949 standard.** The IATF certifications confirm our compliance with requirements regarding the quality management system in the automotive industry. Referring to customer requirements and customer specific requirements ("CSR") TDK always has and will continue to have the policy of respecting individual agreements. Even if IATF 16949 may appear to support the acceptance of unilateral requirements, we hereby like to emphasize that **only requirements mutually agreed upon can and will be implemented in our Quality Management System.** For clarification purposes we like to point out that obligations from IATF 16949 shall only become legally binding if individually agreed upon.

Important notes

8. The trade names EPCOS, CeraCharge, CeraDiode, CeraLink, CeraPad, CeraPlas, CSMP, CTVS, DeltaCap, DigiSiMic, ExoCore, FilterCap, FormFit, LeaXield, MiniBlue, MiniCell, MKD, MKK, MotorCap, PCC, PhaseCap, PhaseCube, PhaseMod, PhiCap, PowerHap, PQSine, PQvar, SIFERRIT, SIFI, SIKOREL, SilverCap, SIMDAD, SiMic, SIMID, SineFormer, SIOV, ThermoFuse, WindCap are **trademarks registered or pending** in Europe and in other countries. Further information will be found on the Internet at www.epcos.com/trademarks.

Release 2018-06